AVTO G
TECHNICAL CERAMICS GROUP

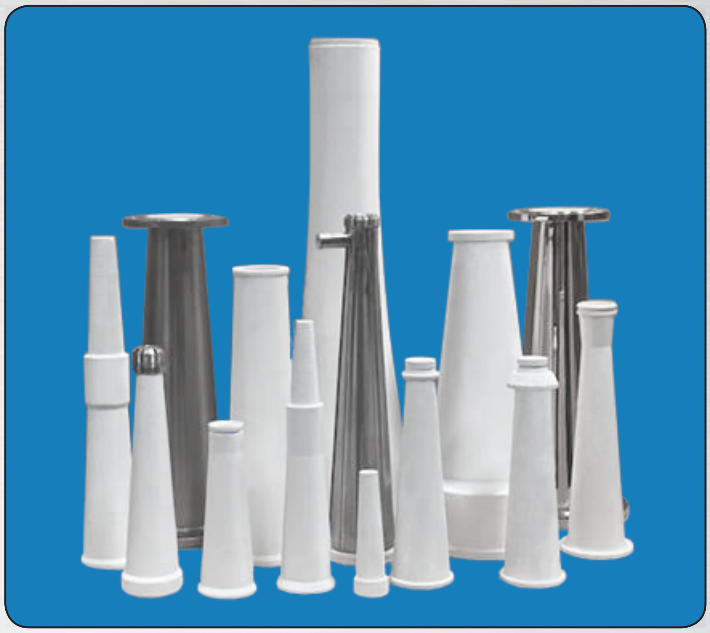

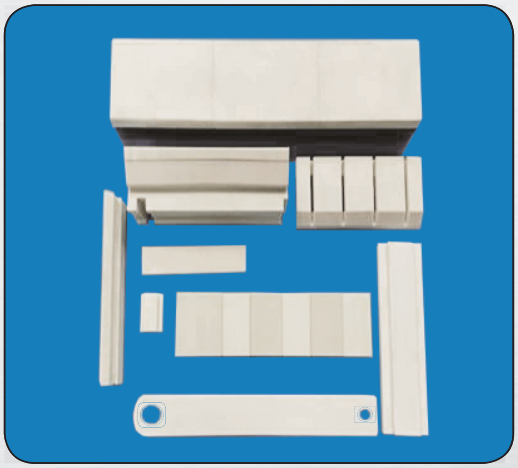

# // CERAMIC IN PAPER INDUSTRY

// CERAMIC DEWATERING ELEMENTS FOR PAPER MACHINES
// CONES FOR PAPER INDUSTRY

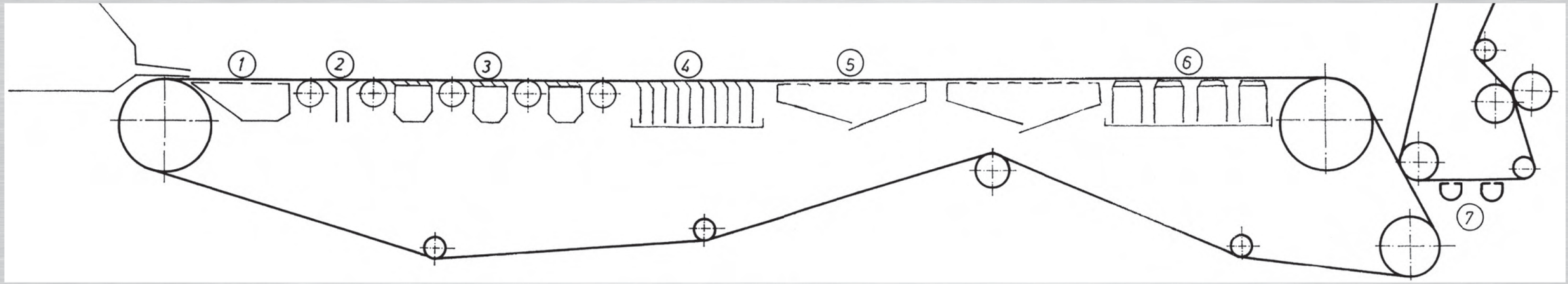


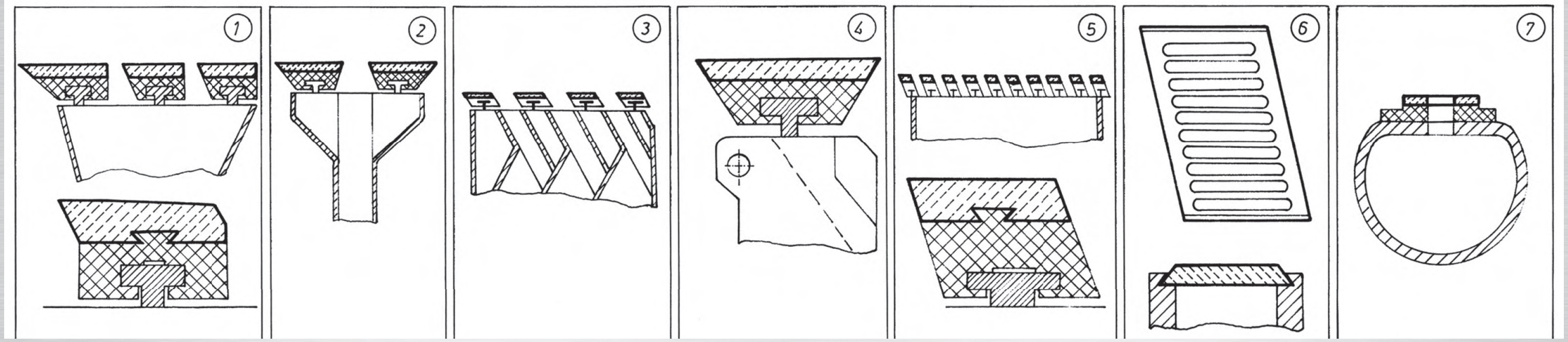


**FORMING BOARD**

This zone, being exposed to the most severe load conditions, requires extreme wear resistance as well as high-quality finish. By fitting the ceramic foils of high-quality ceramics we get such working elements that maintain their geometry for several years, what is very important for regulation and proper functioning of the machine.

**DEFLECTORS**

Such design of the foil supports guarantees uniform wire level, efficient direction of the splashy water jet from dewatering rolls, with additional effect of dewatering the deflectors themselves.

**DEWATERING FOILS**

With appropriate arrangement and geometrically fully defined working areas, dewatering foils may bring the dewatering diagram close to that theoretically required, while a high wear resistance of ceramic elements insures keeping the given parameters even for several years what, of course, justifies their use. Reduced coefficient of friction, extended wire life, possibility of higher operating speeds, unnecessary adjustments and minimized maintenance requirements are direct elements of production economy.

**WET SUCTION BOXES**

For a good and controlled dewatering an appropriate design of wet suction boxes is of great importance. Design with approx. 50% of open areas with ceramic lined foils (supports) gives the best results. Unchangeable smooth sliding surfaces insure high production economy.

**FLAT SUCTION BOXES**

Mechanical characeristics of ceramic foils, geometry of working area holes, and arrangement of the boxes on the machine have decisive effects on the productivity, working area (wire foil) lifetime and paper quality. We can say that a design with high-quality ceramic foils is technically unchangeable.

**FELT CLEANING SUCTION BOXES**

Ceramic foils on the tube-like suction boxes, having smooth surfaces, function properly even for several years without any defects and with negligable felt wear.

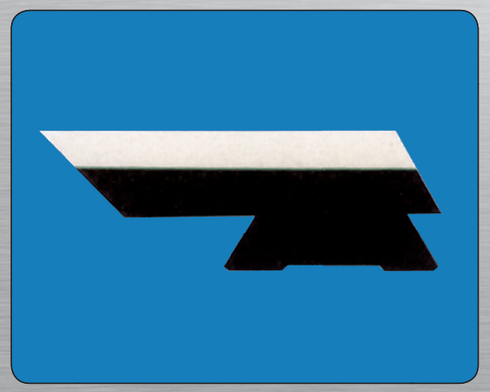

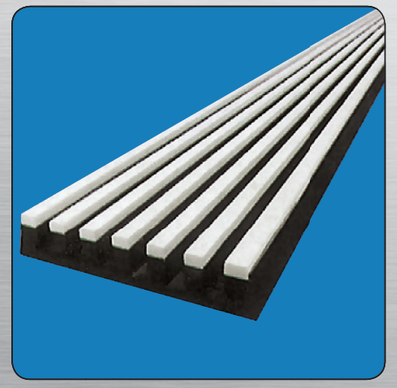

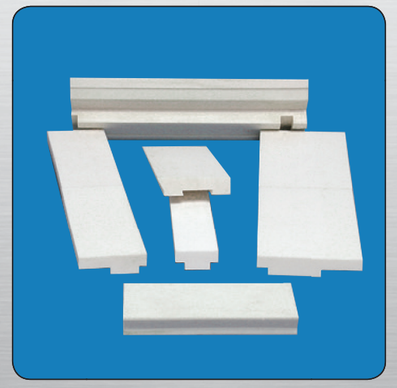

One of our most recognizable products are metal ceramic cones. Housing of the cones can be made from Stainles Steel or from Regular Carbon Steel, painted in the colour regarding the customers wish. The size of the cone is made according to the customers request. The larger the dimensions are the bigger challenge it is for us.

Ceramic cones can be made from various high quality materials. The most common ia ceramic 95% $Al_2O_3$ and 99,7% $Al_2O_3$. For demanding customers we supply cones made of Zirconium Oxide $ZrO_2$ or ZTA material $Al_2O_3$ + 10% $ZrO_2$ or $Al_2O_3$ + 20% $ZrO_2$.

AVTO G d.o.o.
Šlandrova ulica 4, 1231 Ljubljana
Slovenia

T: +386 1 237 3510
F: +386 1 237 3514
E: info@avtog.com

www.avtog.com

AVTO G
TECHNICAL CERAMICS GROUP